Uflow®
Automation
INDIA
Automation Simplified...

Industrial eStores
www.industrialestores.com

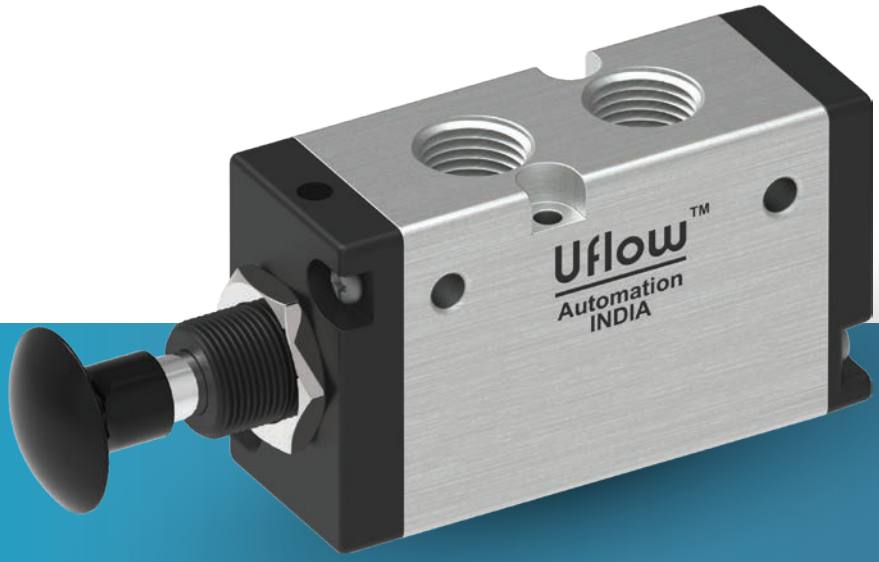

5X2 PUSH PULL VALVE

Specification

Model Information	
Model No	PFA1, PFA1D
Type	5X2
Design	Spool with Cartridge Type
Port Size	In/Out - 1/4" BSP & Exhaust 1/8" BSP
Media	Compressed Air, Filtered & Lubricated
Working Pressure Range	0 - 10 bar
Ambient/Medium Temperature	5° - 60° C
Flow	1200 lpm
Materials of Construction	Aluminium, Nitrile, Brass, Polymer

Features

- Cartridge Type design for Long Life
- Compact Design
- Panel and Manifold Mounting
- Lubrication not essential
- The head can rotate 180˚
- 20 Lacs Cycle tested
- Mounts in any position

1 - Input, 2/4 - Output, 3/5 - Exhaust

Model	Function	Symbol
PFA1	SPRING RETURN	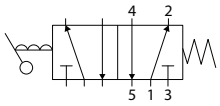
PFA1D	MANUAL RETURN	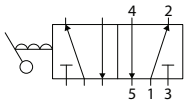

Symbol

Product Image
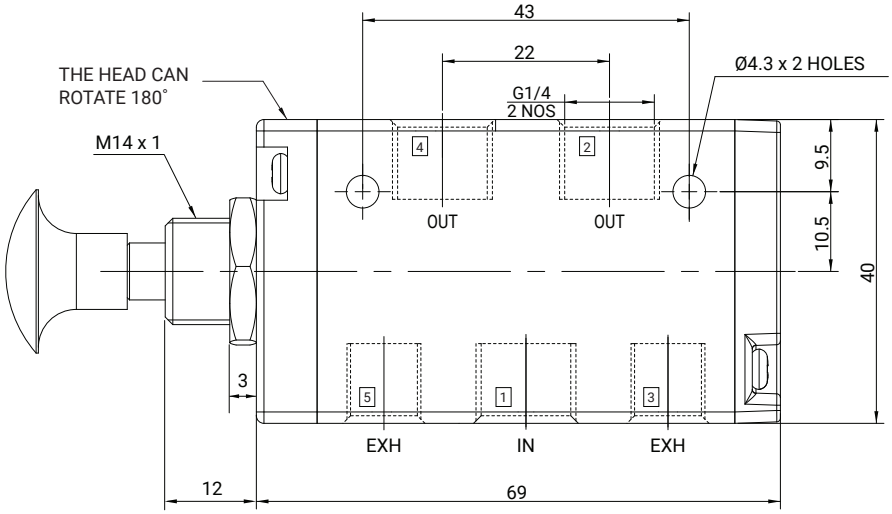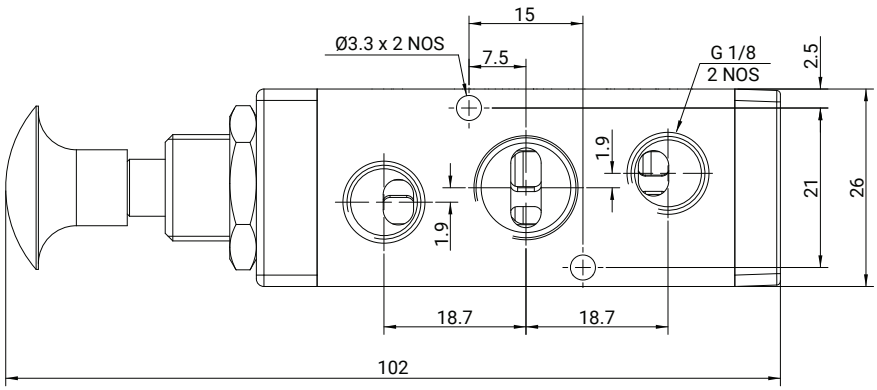
Diagram